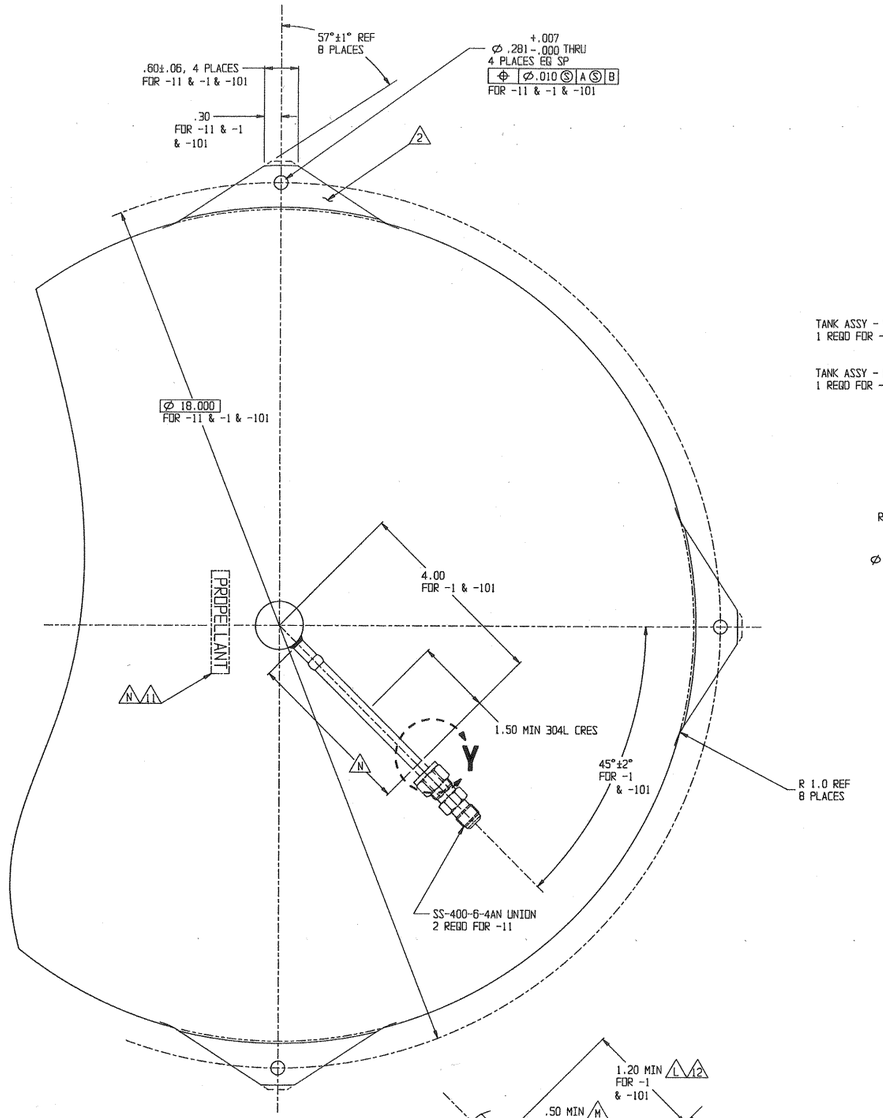

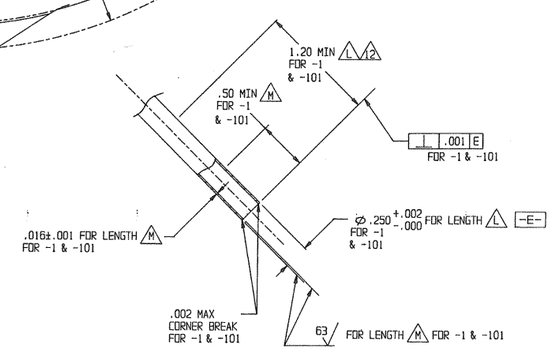

VIEW **Y**
SCALE: 2/1

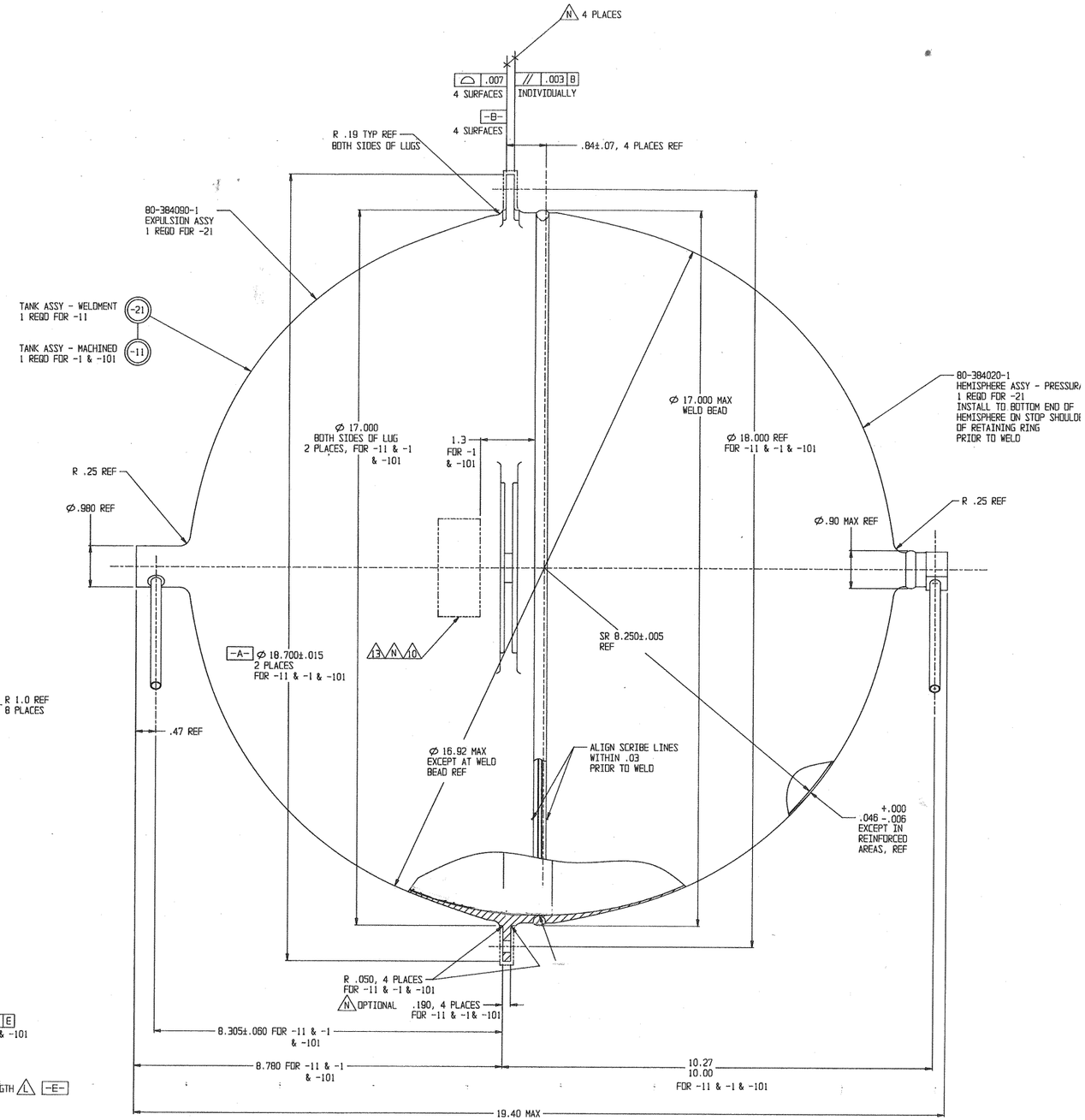

VIEW **X-X** SHEET 1

PRESSURE SYSTEMS, INC. LOS ANGELES, CALIFORNIA			
TANK, PROPELLANT - AXAF-IPS MUPS			
CAGE CODE **18229**	SIZE **E**	DWG NO. 80384	REV A
SCALE: 1/1		SHEET 1 OF 2	

VIEW Z
SCALE: 2/1