TANK TYPE	MOUNT	LOCATION	PMD DEVICE
PMD	Trunion	Prop hemi	

NORTHROP GRUMMAN

The propellant tank is a family of 27" diameter x various lengths long pressure vessel constructed of 6AL-4V titanium. A Propellant Management Device (PMD) povides gas-free expulsion of propellant. Mounting is provided via a trunion located on the lower center sectin cylinder and with struts on the upper and lower boss.

ISO 9001 & AS 9100 REGISTERED

Part Number 80506-7

SIZE: 27.25" ID x 56.14" Length
SIZE: 692 mm ID x 1,426 mm

See below for shorter length Tanks

APPLICABLE DOCUMENTS

Qualification Test Report	56-000241
Acceptance Test Procedure	50-000686
Qualification Test Procedure	50-000687
Cleaning	CPP 4007

TANK CHARACTERISTICS

Operating Pressure, psig	256	Total Volume, in^3	36,300
Proof Pressure, psig	338	Prop Volume, in^3	35,574
Cryo Proof, psig	N/A	Prop Volume, lbs	1,601
Burst Pressure, psig	410	Max Design Wt, lbs	57.81
Actual Burst, psig	510	Minimum Wall, inch	0.021
Normalized Burst, psig	428		

TANK CHARACTERISTICS (Metrics)

Operating Pressure, bar	17.65	Total Volume, l	595
Proof Pressure, bar	23.30	Prop Volume, l	583
Cryo Proof, bar	N/A	Prop Volume, kg N_2H_4	595.20
Burst Pressure, bar	28.269	Max Design Wt, kg	26.22
Actual Burst, bar	29.510	Minimum Wall, MM	0.533

QUALIFICATION TESTS

- Preliminary Examination of Product
- Pre-Proof Volumetric Capacity Test,
- Proof Pressure Test
- Post-Proof Volumetric Capacity Test
- Proof Pressure Cycling Test
- MEOP Pressure Cycling Test
- Propellant Outflow Test
- Bubble Point Test
- Radiograph Inspection of Welds
- External Leak Test
- Vibration Test
- Bubble Point Test
- External Leak Test
- Collapse Pressure test
- External Leak Test
- Radiograph and Penetrant Inspection
- Final Examination of Product
- Burst Test
- Data Review

Notes:

HEMISPHERE FORGINGS

HEMI P/N	QTY	SUPPLIER	Die No
80-506061-1	2	ARCTURUS	3936

RING FORGINGS (Roughed Machined) (inches)

80-506063-1, Center Section Forging	28.92 OD x 26.43 ID x 17.75 Lg
80-506063-7, Center Section Forging	27.43 OD x 26.43 ID x 35.25 Lg

RING FORGINGS (Roughed Machined) (mm)

80-506063-1, Center Section Forging	734.57 OD x 671.32 ID x 450.85 Lg
80-506063-7, Center Section Forging	696.72 OD x 671.32 ID x 895.35 Lg

TUBE TYPE AND SIZE(inches)

Titanium		SIZE
80-506202-1	Pressurant	.250 OD x 0.020 Wall
80-506002-1	Outlet	.3750 OD x 0.020 Wall

TUBE TYPE AND SIZE (mm)

Titanium		SIZE
80-506202-1	Pressurant	6.350 mm x 0.508 Wall
80-506002-1	Outlet	9.525 mm x 0.508 Wall

ACCEPTANCE TESTS

- Preliminary Examination of Product
- Weight
- Pre-Proof Volumetric Capacity Test
- Proof Pressure Test
- Post-Proof Volumetric Capacity Test
- Flow, Differential Pressure Test
- External Leak Test
- Radiograph Inspection of Welds
- Final Examination of Product
- Cleanliness Verification

ATK P/N	CAPACITY	MASS PROP. (Max.)
80506-1	277.26L (16,920 in^3)	36.10 lbs.
80506-2	333.31L (20,340 in^3)	41.60 lbs.
80506-3	389.35L (23,760 in^3)	46.10 lbs.
80506-4	445.40L (27,180 in^3)	49.45 lbs.
80506-5	501.44L (30,600 in^3)	53.35 lbs.
80506-6	548.14L (33,450 in^3)	56.40 lbs.
80506-7	594.85L (36,300 in^3)	59.45 lbs.

NOTE: DASH -7 SHOWN

6033 East Bandini Boulevard
Commerce, California 90040

Telephone (323) 722-0222
Facsimile (323) 721-6002

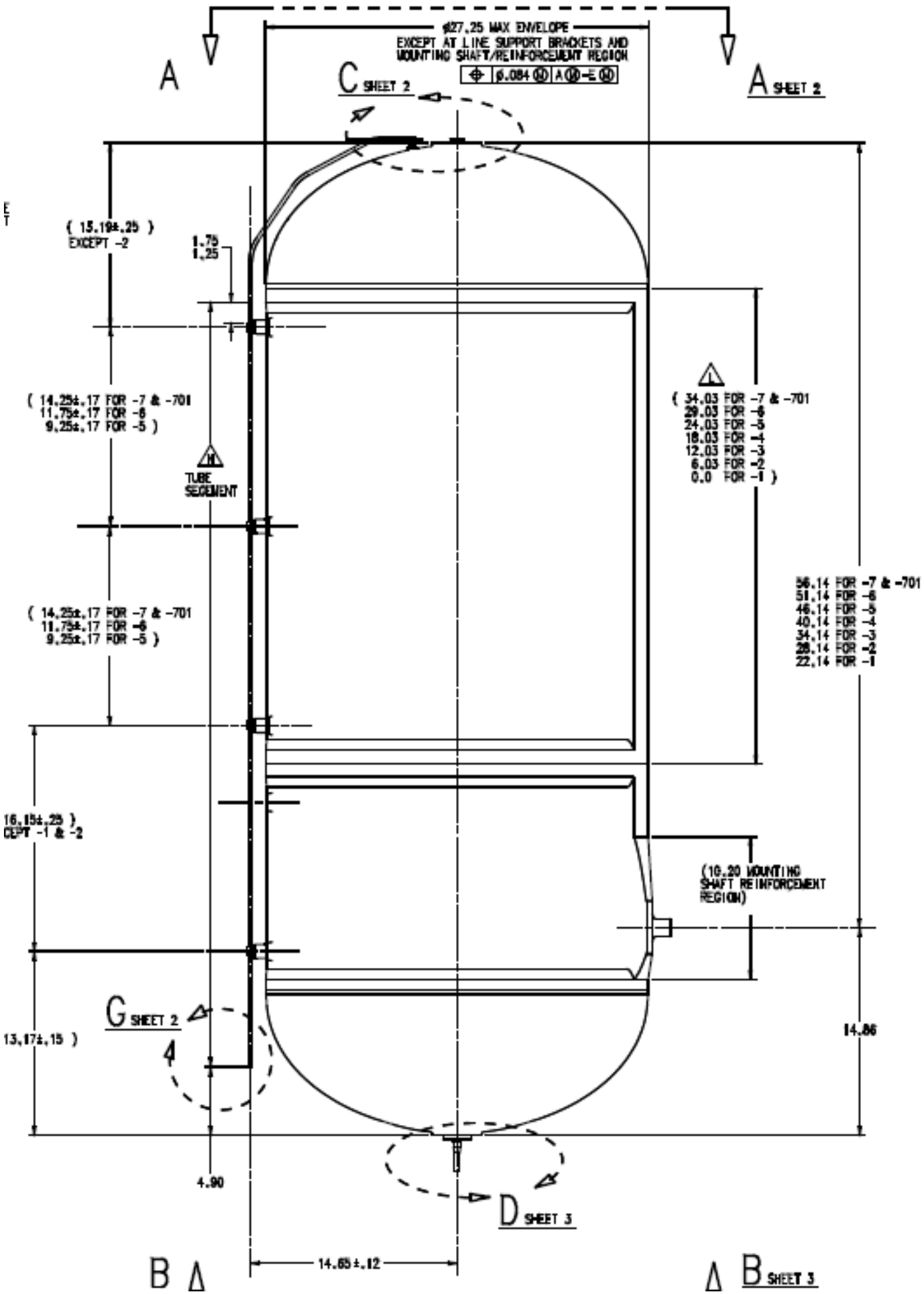
ø27.25 MAX ENVELOPE
EXCEPT AT LINE SUPPORT BRACKETS AND
MOUNTING SHAFT/REINFORCEMENT REGION
ø.084 Ⓜ A Ⓜ E Ⓜ
A
A SHEET 2
C SHEET 2
(15.19±.25)
EXCEPT -2
1.75
1.25
(14.25±.17 FOR -7 & -701
11.75±.17 FOR -6
9.25±.17 FOR -5)
TUBE
SEGEMENT
(14.25±.17 FOR -7 & -701
11.75±.17 FOR -6
9.25±.17 FOR -5)
(34.03 FOR -7 & -701
29.03 FOR -6
24.03 FOR -5
18.03 FOR -4
12.03 FOR -3
6.03 FOR -2
0.0 FOR -1)
56.14 FOR -7 & -701
51.14 FOR -6
46.14 FOR -5
40.14 FOR -4
34.14 FOR -3
28.14 FOR -2
22.14 FOR -1
16.15±.25)
CEPT -1 & -2
(10.20 MOUNTING
SHAFT REINFORCEMENT
REGION)
G SHEET 2
13.17±.15)
14.86
4.90
D SHEET 3
14.65±.12
B
B SHEET 3